

Let's grow together

EPT20-18EHJ

Semi Electric Truck 1.8t

New Choice of Entry-level Electric Pallet Truck

1800KG capacity ,light weight and compact size equivalent to hand pallet trucks.

Offers various options for application solutions

EP EQUIPMENT CO.,LTD
www.ep-ep.com

FEATURE







Performance

The innovative PMM Permenant Magnet Motor technology provide reliabal and energy saving solution

MOLEX/AMP connecters and durable electric wires grreatly reduce malfunctions of components

Auto "SLEEP" mode protect batteries.

Patented Design:

New Integrated Control Head Design

Electrical layout patent.

Opeartion :

Ergonomically-designed tiller head helps increase effciency.

Internal Charger for Easy Charging.

Adopt hand pallet truck lifting system, perfect for start-level operator.

Maintenance :

Assembly Components,Easy for Diagnosis and Replacing

Low voltage protection setting slow down travel speed when batteries hit charging level

Control system allows easy trouble-shooting

Safety :

Handy Emergency Disconnect Button&Driving Unit ensure safety under any situation.

Emergency reverse belly button protects the operator from getting hurt

Anti-rolling back brake keeps the truck from skidding down when truck is out of control or travelling on ramp

Semi Electric Truck 1.8t
EPT20-18EHJ

Distinguishing mark				
1.1	Manufacturer			EP
1.2	Model designation			EPT20-18EHJ
1.3	Drive unit			Electrical
1.4	Operator type			Walkie
1.5	rated capacity	Q	kg	1800
1.6	Load center distance	c	mm	600
1.8	Load distance	x	mm	883/946
1.9	Wheelbase	y	mm	1170/1233
Weight				
2.1	Service weight （include battery）		kg	145
2.2	Axle loading, laden driving side/loading side		kg	645/1300
2.3	Axle loading, unladen driving side/loading side		kg	115/30
Types,Chassis				
3.1	Tyre type driving wheels/loading wheels			PU/PU
3.2	Tyre size, driving wheels （diameter×width）		mm	Φ210x70
3.3	Tyre size, loading wheels （diameter×width）		mm	2x Φ80x60（Φ74x88）
3.5	Wheels, number driving， caster/loading (x=drive wheels)		mm	1x /4
3.7	Track width,rear,loading side	b_{11}	mm	410（535）
Dimensions				
4.4	Lift height	h_3	mm	115
4.9	Height drawbar in driving position min./max.	h_{14}	mm	715/1280
4.15	Lowered height	h_{13}	mm	85(75)
4.19	Overall length	l_1	mm	1613
4.2	Length to face of forks	l_2	mm	463
4.21	Overall width	b_1/ b_2	mm	560(685)
4.22	Fork dimensions	s/ e/ l	mm	50/150/1150
4.25	Distance between fork-arms	b_5	mm	560/685
4.32	Ground clearance, center of wheelbase	m_2	mm	35
4.34.1	Aisle width for pallets 1000 × 1200 crossways	Ast	mm	1684
4.34.2	Aisle width for pallets 800 × 1200 lengthways	Ast	mm	1884
4.35	Turning radius	Wa	mm	1430
Performance data				
5.1	Travel speed, laden/ unladen	km/ h	km/h	2.5/3
5.2	Lifting speed, laden/ unladen		m/ s	10mm/time
5.3	Lowering speed, laden/ unladen		m/ s	Controlable
5.8	Max. gradeability, laden/unladen			2/6
5.1	Service brake type			Electromagnetic
Electric-engine				
6.1	Drive motor rating S2 60 min		kW	0.65
6.2	Lift motor rating at S3 15%		kW	Manual Lifting
6.3	The maximum allowed size battery		mm	185/125/190
6.4	Battery voltage/nominal capacity K20			24/30
6.5	Battery weight		kg	9.5*2
Addition data				
8.1	Type of drive control			DC
10.5	Steering type			Mechanical
10.7	Sound pressure level at the driver's ear			74

1.The parameters in the table are of the standard model. For more information, please contact us.
2.The parameters are subject to change without notice.

Option

Options	EPT20-18EHJ
Fork length	● 800/915/1000/1070/1100/1300/1400mm
Fork width	●520/600mm
Single load wheel	●
Fork lowered height	● 40mm（Capacity <=1000kg）
Driving wheel	PU wheel with Pattern
Scale	●

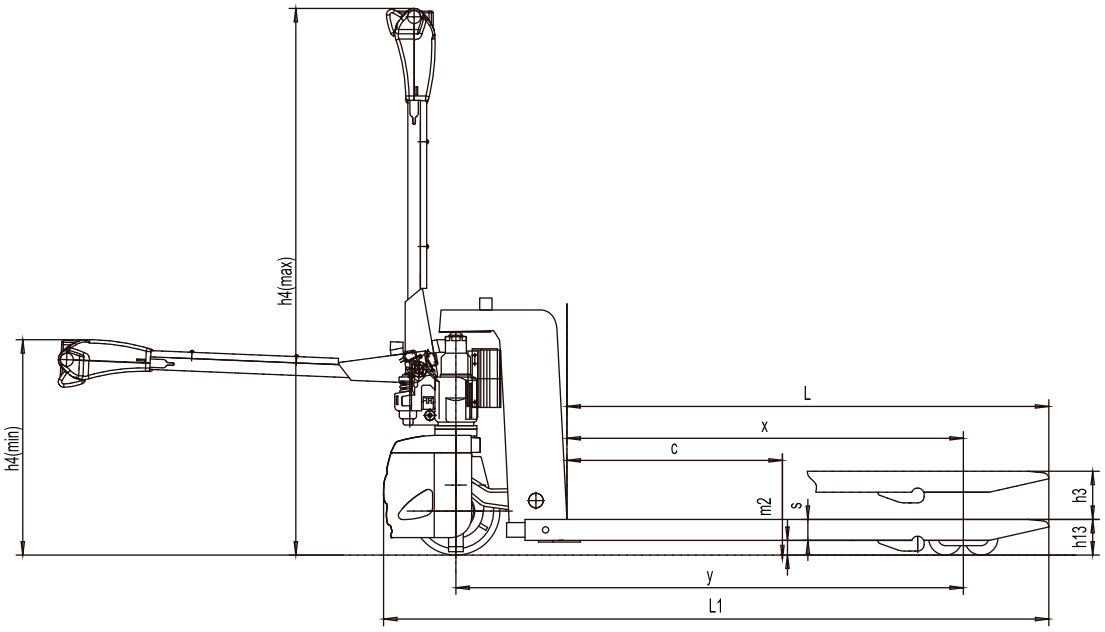
h4(max)
h4(min)
L
x
c
m2
s
h3
h13
y
L1

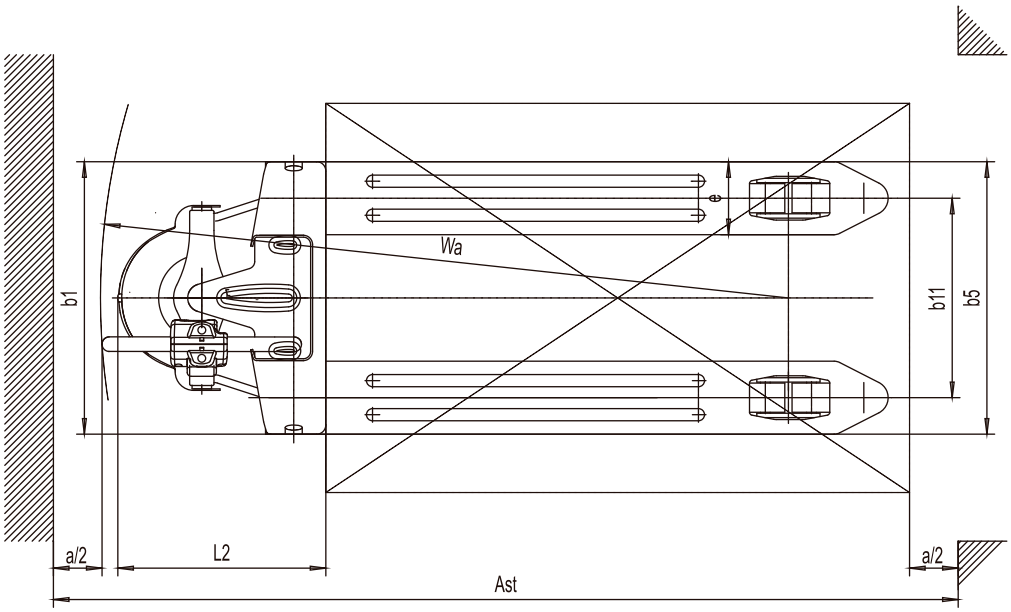
e
Wa
b1
b11
b5
a/2
L2
a/2
Ast