

Let's grow together

MAX-8

Excellent Performances & Reliability

CPD15/18F8(-H)
Four-wheel Electric Forklift 1.5/1.8t

CPD20/25F8(-H)
Four-wheel Electric Forklift 2.0/2.5t

Continous 8-hour Operation
Charging-free for Heavy-duty Shift.

EP EQUIPMENT CO.,LTD
www.ep-ep.com

MAX-8

Four-wheel Electric Forklift 1.5/1.8t
CPD15/18F8(-H)

Distinguishing mark					
1.1	Manufacturer			EP	EP
1.2	Model designation			CPD15F8/CPD15F8-H	CPD18F8/CPD18F8-H
1.3	Drive unit			Electric	Electric
1.4	Operator type			seated	seated
1.5	RRated capacity	Q	t	1.5	1.8
1.6	Load center distance	c	mm	500	500
1.8	Load distance，centre of drive axle to fork	x	mm	413	413
1.9	Wheelbase	y	mm	1400	1400
Weight					
2.1	Service weight		kg	3050	3120
2.2	Axle loading, laden front/ rear		kg	3899/651	4331/589
2.3	Axle loading, unladen front/ rear		kg	1485/1565	1489/1631
Types,Chassis					
3.1	Tyre type			pneumatic	pneumatic
3.2	Tyre size, front			6.5-10-10PR	6.5-10-10PR
3.3	Tyre size, rear			5.00-8-10PR	5.00-8-10PR
3.5	Wheels, number front/ rear (x=drive wheels)		mm	2x/ 2	2x/ 2
3.6	Tread, front	b_{10}	mm	890	890
3.7	Tread, rear	b_{11}	mm	920	920
Dimensions					
4.1	Tilt of mast/fork carriage forward/backward	α/ β (°)		6/ 12	6/ 12
4.2	Height, mast lowered	h_1	mm	2060	2060
4.3	Free lift	h_2	mm	120	120
4.4	Lift height	h_3	mm	3000	3000
4.5	Height, mast extended	h_4	mm	4010	4010
4.7	Height of overhead guard (cabin)	h_6	mm	2098	2098
4.8	Seat height/standing height	h_7	mm	1053	1053
4.12	Tow coupling height	h_{10}	mm	390	390
4.19	Overall length	l_1	mm	3090	3090
4.20	Length to face of forks	l_2	mm	2170	2170
4.21	Overall width	b_1/ b_2	mm	1080	1080
4.22	Fork dimensions	s/ e/ l	mm	40×100×920	40×100×920
4.23	Fork carriage class/type A, B			A	A
4.24	Fork carriage width	b_3	mm	1120	1120
4.31	Ground clearance, laden, below mast	m_1	mm	120	120
4.32	Ground clearance, center of wheelbase	m_2	mm	110	110
4.34.1	Aisle width for pallets 1000 × 1200 crossways	Ast	mm	4205	4205
4.34.2	Aisle width for pallets 800 × 1200 crossways	Ast	mm	4245	4245
4.35	Turning radius	Wa	mm	2045	2045
4.36	Internal turning radius	b_{13}	mm	——	——
Performance data					
5.1	Travel speed, laden/ unladen		km/ h	14/14.5	14/14.5
5.2	Lifting speed, laden/ unladen		m/ s	0.3/0.45	0.3/0.45
5.3	Lowering speed, laden/ unladen		m/ s	0.45/0.44	0.45/0.44
5.5	Drawbar pull, laden/unladen		N	——	——
5.6	Max. drawbar pull, laden/unladen		N	——	——
5.7	Gradeability, laden/unladen		%	——	——
5.8	Max. gradeability, laden/unladen		%	10.5/14	10.5/14
5.9	Acceleration time, laden/unladen		s	Hydraulic / Mechanical	Hydraulic / Mechanical
5.10	Service brake			——	——
Electric-engine					
6.1	Drive motor rating S2 60 min		kW	8	8
6.2	Lift motor rating at S3 15%		kW	11/7.5	11/7.5
6.3	Battery according to DIN 43531 /35 / 36 A, B, C, no			——	——
6.4	Battery voltage/nominal capacity K5			48/400	48/540
6.5	Battery weight		kg	923	923
	Battery dimensions L/W/H		mm	——	——
6.6	Energy consumption according to VDI cycle		kWh/h	——	——
Addition data					
8.1	Type of drive unit			——	——
10.1	Operating pressure for attachments		bar	145	145
10.2	Oil volume for attachments		L/min	——	——
10.7	Sound pressure level at the driver's ear		dB (A)	70	70
10.8	Towing coupling, type DIN 15170			——	——

1.The parameters in the table are of the standard model. For more information, please contact us.
2.The parameters are subject to change without notice.

MAX-8

Four-wheel Electric Forklift 2.0/2.5t
CPD20/25F8(-H)

Distinguishing mark							
1.1	Manufacturer			EP	EP	EP	EP
1.2	Model designation			CPD20F8	CPD20F8(-H)	CPD25F8	CPD25F8(-H)
1.3	Drive unit			Electric	Electric	Electric	Electric
1.4	Operator type			seated	seated	seated	seated
1.5	rated capacity	Q	t	2	2	2.5	2.5
1.6	Load center distance	c	mm	500	500	500	500
1.8	Load distance，centre of drive axle to fork	x	mm	456	456	456	456
1.9	Wheelbase	y	mm	1500	1500	1500	1500
Weight							
2.1	Service weight （include battery）		kg	3860	3860	4030	4030
2.2	Axle loading, laden driving wheels /steering wheels		kg	5350/510	5350/510	5930/600	5930/600
2.3	Axle loading, unladen driving wheels /steering wheels		kg	1770/2090	1770/2090	1800/2230	1800/2230
Types,Chassis							
3.1	Tyre type,driving wheels /steering wheels			pneumatic	pneumatic	pneumatic	pneumatic
3.2	Tyre size, driving wheels			23×9-10	23×9-10	23×9-10	23×9-10
3.3	Tyre size, steering wheels			18X7-8	18X7-8	18X7-8	18X7-8
3.5	Wheels, number driving/steering (x=drive wheels)		mm	2x/ 2	2x/ 2	2x/ 2	2x/ 2
3.6	Tread, Driving wheels	b_{10}	mm	1045	1045	1045	1045
3.7	Tread, Steering wheels	b_{11}	mm	950	950	950	950
Dimensions							
4.1	Tilt of mast/fork carriage forward/backward	α/ β (°)		6/11	6/11	6/11	6/11
4.2	Height, mast lowered	h_1	mm	2180	2180	2180	2180
4.3	Free lift （load backrest）	h_2	mm	120	120	120	120
4.4	Lift height	h_3	mm	3000	3000	3000	3000
4.5	Height, mast extended	h_4	mm	4010	4010	4010	4010
4.7	Height of overhead guard (cabin)	h_6	mm	2180	2180	2180	2180
4.8	Seat height	h_7	mm	1105	1105	1105	1105
4.12	Tow center of pin height	h_{10}	mm	305	305	305	305
4.19	Overall length	l_1	mm	3376	3376	3376	3376
4.20	Length to face of forks	l_2	mm	2346	2346	2346	2346
4.21	Overall width	b_1/ b_2	mm	1252	1252	1252	1252
4.22	Fork dimensions	s/ e/ l	mm	40×120×1070	40×120×1070	40×120×1070	40×120×1070
4.23	Fork carriage class/type A, B			2A	2A	2A	2A
4.24	Fork carriage width	b_3	mm	1085	1085	1085	1085
4.31	Ground clearance, laden, below mast	m_1	mm	110	110	110	110
4.32	The minimum ground clearance of frame	m_2	mm	125	125	125	125
4.34.1	Aisle width for pallets 1000 × 1200 crossways	Ast	mm	4235	4235	4235	4235
4.34.2	Aisle width for pallets 800 × 1200 lengthways	Ast	mm	4285	4285	4285	4285
4.35	Turning radius	Wa	mm	2135	2135	2135	2135
Performance data							
5.1	Travel speed, laden/ unladen		km/ h	13/ 13.5	13/ 13.5	13/ 13.5	13/ 13.5
5.2	Lifting speed, laden/ unladen		m/ s	0.3/ 0.45	0.28/ 0.45	0.3/ 0.45	0.28/ 0.45
5.3	Lowering speed, laden/ unladen		m/ s	0.44/ 0.435	0.44/ 0.435	0.44/ 0.435	0.44/ 0.435
5.5	Drawbar pull, laden/unladen		N	——	——	——	——
5.6	Max. drawbar pull, laden/unladen (time)		N	17000	17000	17000	17000
5.7	Gradeability, laden/unladen		%	——	——	——	——
5.8	Max. gradeability, laden/unladen		%	10.5/14	10.5/14	10.5/14	10.5/14
5.10	Service brake type			Hydraulic+Mechanical	Hydraulic+Mechanical	Hydraulic+Mechanical	Hydraulic+Mechanical
	park brake type			Mechanical	Mechanical	Mechanical	Mechanical
Electric-engine							
6.1	Drive motor rating S2 60 min		kW	11	11	11	11
6.2	Lift motor rating at S3 15%		kW	13	8.6	13	10
6.3	The maximum allowed size battery		mm	——	——	——	——
6.4	Battery voltage/nominal capacity K5			48/600(Max770)	48/600(Max770)	48/630(Max770)	48/630(Max770)
6.5	Battery weight		kg	940	940	1044	1044
Addition data							
8.1	Type of drive unit			AC	AC	AC	AC
10.5	Steering type			——	——	——	——
10.7	Sound pressure level at the driver's ear		dB (A)	71	72	71	72

1.The parameters in the table are of the standard model. For more information, please contact us.
2.The parameters are subject to change without notice.

MAX-8

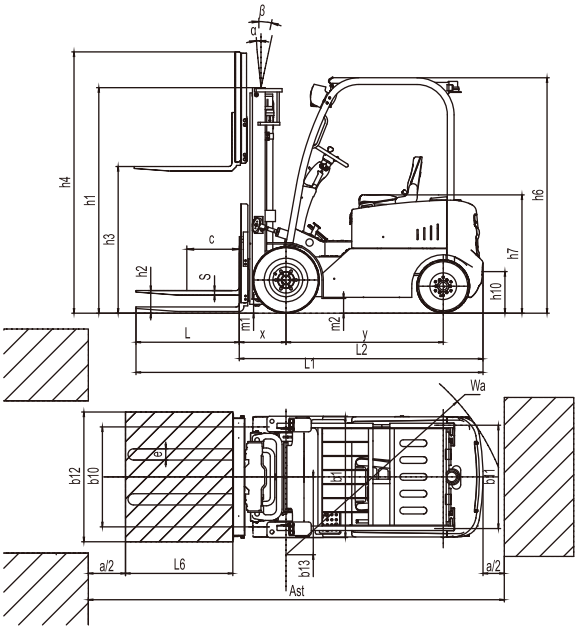



Option

options	CPD15/18F8(-H)	CPD20/25F8(-H)
Fork length	•	•
Folding fork	•	•
high capacity battery	•	•
Imported battery	•	•
Rubber solid tyre	•	•
No-mark solid tire	•	•
Cold storage（Apply to -20℃）	•	•
Lateral battery change	•	•
Fork weighing system	•	•
Customerized Overhead height	•	•
Mast lifting height	•	•
Attachment	•	•
Integrated side shift	•	•
LED Front working light	•	•
Rear working light	•	•
Warning light	•	•
fire extinguisher	•	•
Auto-filling water system	•	•
Suspension seat	•	•
Heater	•	•
Front window with wiper	•	•
Rear window with wiper	•	•
Full cabin	•	•
OPS	•	•
Special backrest	•	•
battery trolley for lateral battery extraction	•	•
FAN	•	•
Charger（220/380V）	•	•
Special modification for Drive-in Racking	•	•







Mast Option

1.5~1.8t F8 series mast:

Tpye	Model	Max.fork height h3	Overall height			Free lift		Front Overhang X		Tilt range		Capacity			
			Lowered h1	Extended		Without backrest	With backrest h2			FWD α	FWD α	Load capacity at 500 mm			
				Without backrest	With backrest							Single tire		Double tire	
								1.5t	1.8t			1.5t	1.8t	1.5t	1.8t
		mm	mm	mm	mm	mm	mm	mm	mm	Deg	Deg	kg	kg	kg	kg
Duplex ZT	2W200	2000	1480	2510	3010	120	120	413	413	6	12	1500	1800	1500	1800
	2W250	2500	1730	3010	3510	120	120	413	413	6	12	1500	1800	1500	1800
	2W270	2700	1830	3210	3710	120	120	413	413	6	12	1500	1800	1500	1800
	2W300	3000	1980	3510	4010	120	120	413	413	6	12	1500	1800	1500	1800
	2W330	3300	2130	3810	4310	120	120	413	413	6	12	1500	1800	1500	1800
	2W350	3500	2230	4010	4510	120	120	413	413	6	12	1500	1800	1500	1800
	2W360	3600	2280	4110	4610	120	120	413	413	6	12	1500	1800	1500	1800
	2W400	4000	2530	4510	5010	120	120	413	413	6	12	1400	1600	1500	1800
	2W430	4300	2680	4810	5310	120	120	413	413	6	6	1300	1500	1400	1600
	2W450	4500	2780	5010	5510	120	120	413	413	6	6	1250	1400	1350	1500
Duplex ZZ	2F250	2500	1765	3010	3510	1255	755	413	413	6	12	1500	1800	1500	1800
	2F270	2700	1865	3210	3710	1355	855	413	413	6	12	1500	1800	1500	1800
	2F300	3000	2015	3510	4010	1505	1005	413	413	6	12	1500	1800	1500	1800
	2F330	3300	2165	3810	4310	1655	1155	413	413	6	12	1500	1800	1500	1800
	2F360	3600	2315	4110	4610	1805	1305	413	413	6	12	1500	1800	1500	1800
	2F400	4000	2515	4510	5010	2005	1505	413	413	6	12	1400	1700	1500	1800
Triplex DZ	3F430	4300	1985	4810	5310	1475	975	440	440	6	6	1250	1450	1350	1550
	3F450	4500	2035	5010	5510	1525	1025	440	440	6	6	1200	1350	1300	1450
	3F480	4800	2135	5310	5810	1625	1125	440	440	6	6	1100	1250	1200	1350
	3F500	5000	2200	5510	6010	1690	1190	440	440	6	6	1050	1150	1150	1250
	3F550	5500	2370	6010	6510	1860	1360	440	440	3	6	/	900	950	1050
	3F600	6000	2585	6510	7010	2075	1575	440	440	3	6	/	/	750	850

Note:With sideshifter minus 150Kg, with integral sideshifter minus 100Kg.

1.The parameters in the table are of the standard model. For more information, please contact us.
2.The parameters are subject to change without notice.

CPD15F8 (-H)
RATED CAPACITIES GRAPH

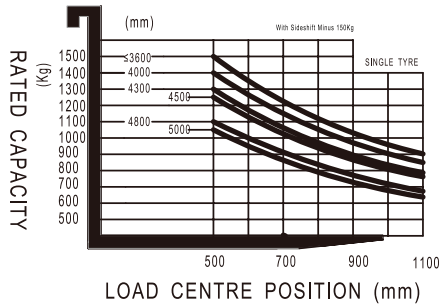

CPD18F8 (-H)
RATED CAPACITIES GRAPH

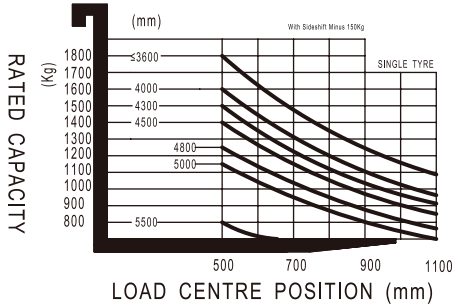

Mast Option

CPD20-25F8 mast types

Tpye	Model	Max.fork height h3	Overall height			Free lift		Front Overhang X		Tilt range		Capacity			
			Lowered h1	Extended		Without backrest	With backrest h2			FWD α	BWD β	Load capacity at 500 mm			
				Without backrest	With backrest h4							Single tire		Double tire	
								2t	2.5t			2t	2.5t	2t	2.5t
		mm	mm	mm	mm	mm	mm	mm	mm	Deg	Deg	kg	kg	kg	kg
Wide view mast	2W200	2000	1485	2685	3010	120	120	456	456	6	11	2000	2500	2000	2500
	2W250	2500	1735	3185	3510	120	120	456	456	6	11	2000	2500	2000	2500
	2W270	2700	1835	3385	3710	120	120	456	456	6	11	2000	2500	2000	2500
	2W300	3000	1985	3685	4010	120	120	456	456	6	11	2000	2500	2000	2500
	2W330	3300	2135	3985	4310	120	120	456	456	6	11	2000	2500	2000	2500
	2W350	3500	2235	4185	4510	120	120	456	456	6	11	2000	2500	2000	2500
	2W360	3600	2285	4285	4610	120	120	456	456	6	11	2000	2500	2000	2500
	2W400	4000	2535	4685	5010	120	120	456	456	6	11	1900	2300	2000	2500
	2W430	4300	2685	4985	5310	120	120	456	456	6	6	1800	2100	1950	2450
	2W450	4500	2785	5185	5510	120	120	456	456	6	6	1700	2000	1900	2400
wide view full 2-stage mast	2F250	2500	1770	3205	3510	1065	760	456	456	6	11	2000	2500	2000	2500
	2F270	2700	1870	3405	3710	1165	860	456	456	6	11	2000	2500	2000	2500
	2F300	3000	2030	3705	4010	1325	1020	456	456	6	11	2000	2500	2000	2500
	2F330	3300	2170	4005	4310	1465	1160	456	456	6	11	2000	2500	2000	2500
	2F360	3600	2330	4305	4610	1625	1320	456	456	6	11	2000	2500	2000	2500
	2F400	4000	2580	4705	5010	1875	1570	456	456	6	11	1900	2300	2000	2500
wide view full 3-stage mast	3F430	4300	2020	5000	5310	1320	1010	456	456	6	6	1700	2000	1900	2400
	3F450	4500	2100	5200	5510	1400	1090	500	500	6	6	1600	1900	1800	2300
	3F480	4800	2205	5500	5810	1505	1195	500	500	6	6	1500	1700	1700	2100
	3F500	5000	2290	5700	6010	1590	1280	500	500	6	6	1400	1600	1600	2000
	3F550	5500	2540	6200	6510	1840	1530	500	500	3	6	1050	1200	1500	1800
	3F600	6000	2790	6700	7010	2090	1780	500	500	3	6	700	800	1400	1600

Note:With sideshifter minus 200Kg, with integral sideshifter minus 150Kg.

1.The parameters in the table are of the standard model. For more information, please contact us.
2.The parameters are subject to change without notice.

CPD20F8 (-H)
RATED CAPACITIES GRAPH

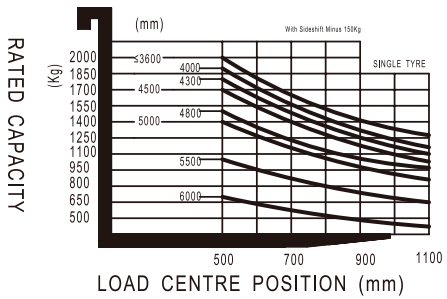

CPD25F8 (-H)
RATED CAPACITIES GRAPH

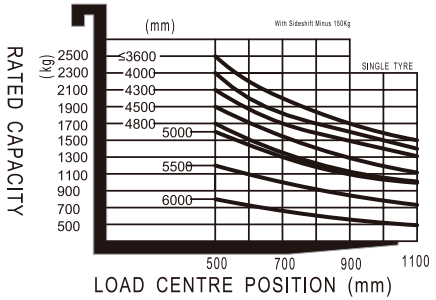

MAX-8